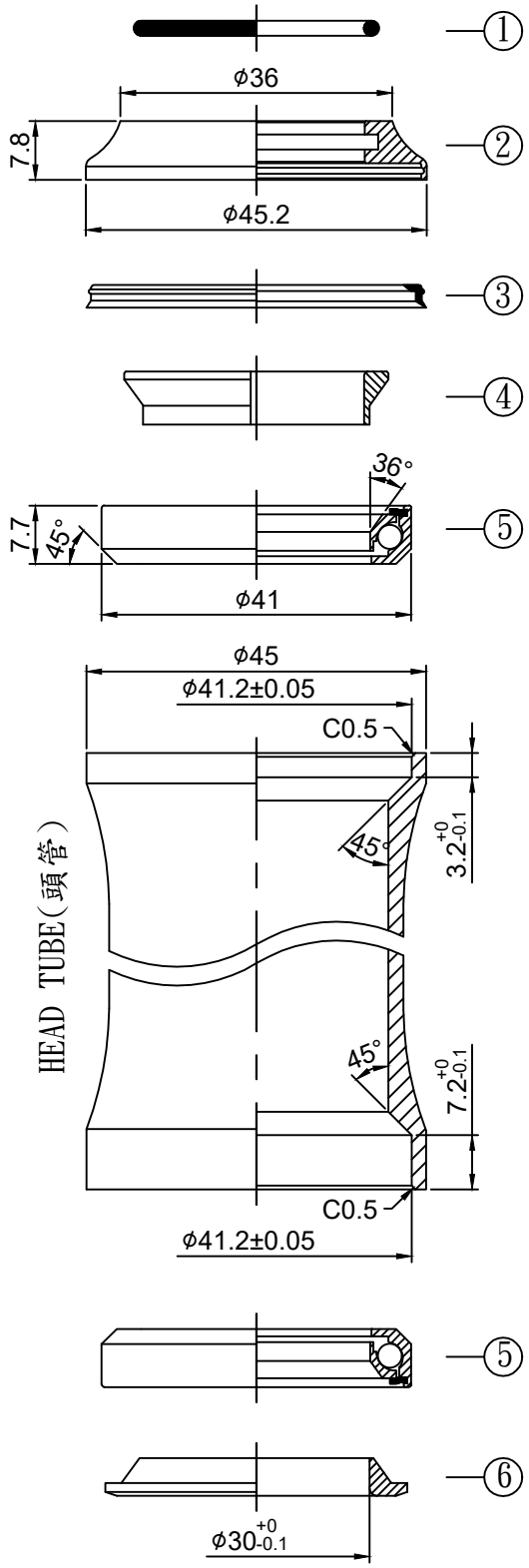

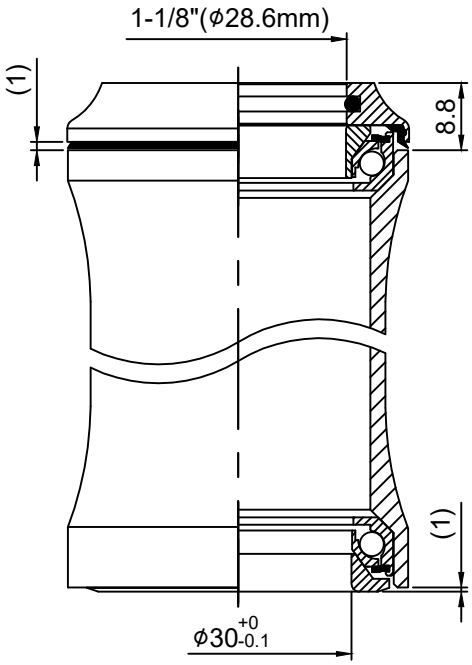

可選配之上塞高度
(TOP COVER IS OPTIONAL)

型號(MODEL NO.): H50

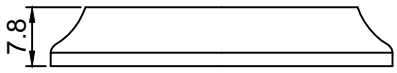

型號(MODEL NO.): H50M

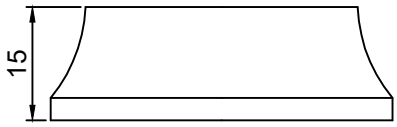

型號(MODEL NO.): H50H

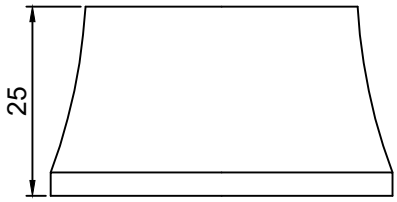

堆積高度(STACK HEIGHT)=9.8±1mm

NO.	零件名稱 PART NAME	材質 MATERIAL	圖號 DRAWING NO.	台量 Q'TY	尺寸 DIM. DESCRIPTION
1	O形圈 O-RING	橡膠 NBR	120-8	1	ID28.5xφ2
2	鋁上塞 TOP COVER	鋁合金 ALUMINUM	23-3	1	1-1/8"
3	防塵蓋 DUST-RESISTANT COVER	橡膠 NBR	23-0	1	
4	塑膠斜管 COMPRESSION RING	塑膠 NYLON	2036-2	1	1-1/8"
5	卡式軸承 CARTRIDGE BALL BEARING	鉻鉬鋼 CR-MO STEEL	CBB-41 (951S)	2	OD41x36°x45°
6	下塞 CROWN RACE	碳鋼 STEEL	146-6	1	φ30 +0 -0.1

- Full-integrated headset
- For 1-1/8" threadless steerer
- Headtube OD.= 45mm
- 6061/T6 cnc machined top cover with seals
- Cold-forged steel crown race
- Cartridge ball bearings

- 全隱藏式車頭碗組
- 1-1/8"(28.6mm) 無牙式前叉立管
- 車頭管外徑=45mm[建議值]
- 鋁合金(6061)上塞
- 碳鋼下塞
- 卡式軸承

單位 UNIT	mm	比例 SCALE	1:1	日期 DRAWING DATE	2024.10.08	角法 VIEW	
型號 ITEM NO.	H50						版次(REV.):B
品名 PART NAME	H50 組立圖(Assembly drawing)						
規格 DIMENSION	1-1/8"x41.2x30						
圖號 PART NO.	H50/(H50M/H50H) 組立圖-B						
neco® 誌慶工業股份有限公司							